"APPROVED FOR RELEASE: 08/09/2001 CIA-RDP86-00513R001548730010-2

SHCHEDRINA, Z.G.

Foraminifer fauna (Foraminifera) of sea waters in the region of southern Sakhalin and the southern Kurile Islands. Issl. dal'nevost. Issl. dal'nevost. mor. SSSR no.5:5-41 '58. (MIRA 12:3)
(Sakhalin--Foraminifera) (Kurile Islands--Foraminifera)

APPROVED FOR RELEASE: 08/09/2001 CIA-RDP86-00513R001548730010-2"

"APPROVED FOR RELEASE: 08/09/2001 CIA-RDP86-00513R001548730010-2

SHCHEDRINA, Z.G.

Fossil foraminifers in bottom deposits of the Kara Sea.
Sbor.st.po paleont.i biostrat. no.11:66-71 '58.
(MIRA 13:1)

1. Zoologicheskiy institut Akademii nauk SSSR.
(Kara Sea--Foraminifera, Fossil)

APPROVED FOR RELEASE: 08/09/2001 CIA-RDP86-00513R001548730010-2"

"APPROVED FOR RELEASE: 08/09/2001 CIA-RDP86-00513R001548730010-2

SHCHEDRINA, Z.G.

Foraminifera of the Kurile-Kamchatka Trench. Trudy Inst. okean. 27: 161-179 '58. (MIRA 11:4)

1. Zoologicheskiy institut AN SSSR.
(Okhotsk, Sea of—Foraminifera)

APPROVED FOR RELEASE: 08/09/2001 CIA-RDP86-00513R001548730010-2"

"APPROVED FOR RELEASE: 08/09/2001 CIA-RDP86-00513R001548730010-2

[illegible], V. I.

"Foraminifera as an Indicator of Ecological Conditions and Climatic Changes in the Arctic Basin". report to be submitted for the Intl. Oceanographic Cong. New York City. 31 Aug - 11 Sep 1959.

(Institute of Geology, Academy of Sciences)
Inst. Oceanology

APPROVED FOR RELEASE: 08/09/2001 CIA-RDP86-00513R001548730010-2"

"APPROVED FOR RELEASE: 08/09/2001 CIA-RDP86-00513R001548730010-2

LINDBERG, G.U.; SHCHEDRINA, Z.G.; DOGEL', V.A.; RESHETNYAK, V.V.; STRELKOV, A.A.; KOLTUN, V.M.; NAUMOV, D.V.; IVANOV, A.V.; BYKHOVSKIY, B.Ye. ZHUKOV, Ye.V.; PERGAMENT, T.S.; KOROTKEVICH, V.S.; USHAKOV, P.V.; KLYUGE, G.A.; ANDROSOVA, Ye.I.; GOSTILOVSKAYA, M.G.; BRODSKIY, K.A.; GUSEV, A.V.; TARASOV, N.I.; GUR'YANOVA, Ye.F.; VAGIN, V.L.; LOMAKINA, N.B.; BULYCHEVA, A.I.; KOBYAKOVA, Z.I.; LOZINO-LOZINSKIY, L.K.; YAKOVLEVA, A.M.; GALKIN, Yu.I.; SKARLATO, O.A.; AKIMUSHKIN, I.I.; D'YAKONOV, A.M.; BARANOVA, Z.I.; SAVEL'YEVA, T.S.; SKALKIN, V.A.

List of the fauna of marine waters of southern Sakhalin and southern Kuriles. Issl.dal'nevost.mor.SSSR no.6:173-256 '59. (MIRA 13:3)

1. Zoologicheskiy institut AN SSSR.
(Sakhalin--Marine fauna)
(Kurile Islands--Marine fauna)

APPROVED FOR RELEASE: 08/09/2001 CIA-RDP86-00513R001548730010-2"

"APPROVED FOR RELEASE: 08/09/2001 CIA-RDP86-00513R001548730010-2

SHCHEDRINA, Z.G.

Foraminifera in the bays of the White Sea. Trudy Belomor.biol. sta.MGU 1:51-69 '62. (MIRA 16:1)

1. Zoologicheskiy institut Akademii nauk SSSR.
(White Sea--Foraminifera)

APPROVED FOR RELEASE: 08/09/2001 CIA-RDP86-00513R001548730010-2"

"APPROVED FOR RELEASE: 08/09/2001 CIA-RDP86-00513R001548730010-2

Author: [illegible]

Foraminifera of high latitudes in the Arctic basin. Trudy AANII 253:79-119 '64.

Foraminifera of the northern part of the Greenland Sea. Ibid.:120-142 (MIRA 17:12)

APPROVED FOR RELEASE: 08/09/2001 CIA-RDP86-00513R001548730010-2"

"APPROVED FOR RELEASE: 08/09/2001 CIA-RDP86-00513R001548730010-2

SHCHEDRINA, Z.G.

Some changes in the system of the order Rotaliida (Foraminifera). Vop. mikropaleont. no.8:91-101 '64.

(MIRA 18:5)

1. Zoologicheskiy institut AN SSSR.

APPROVED FOR RELEASE: 08/09/2001 CIA-RDP86-00513R001548730010-2"

"APPROVED FOR RELEASE: 08/09/2001 CIA-RDP86-00513R001548730010-2

[illegible]74, G.V.; [illegible]NA, Z.G.

Foraminifera in the bottom sediments of the Norwegian [illegible].
Trudy VN[illegible] [illegible]:285-296 '65. [illegible]

APPROVED FOR RELEASE: 08/09/2001 CIA-RDP86-00513R001548730010-2"

"APPROVED FOR RELEASE: 08/09/2001 CIA-RDP86-00513R001548730010-2

SHCHEDRINSKAYA, Ye. M.; FRID, M. A.; LIBITSKER, D. Ye.; RUBINSHTEIN, I. S.

"Cases of Colibacillosis in Newborn Children," Zhurnal Mikrobiologii, Epidemiologii i Immunobiologii, No 1, 1953.

Belorussian Institute of Epidemiology and Microbiology

APPROVED FOR RELEASE: 08/09/2001 CIA-RDP86-00513R001548730010-2"

"APPROVED FOR RELEASE: 08/09/2001 CIA-RDP86-00513R001548730010-2

SHCHEPILOV, N. S.; SHCHEDRINSKAYA, Z. M.

Effect of designs of pipe-press cores on the quality of molded products. Trudy KhPI 31 no.1:91-95 '59. (MIRA 13:10)
(Pipe, Clay)

APPROVED FOR RELEASE: 08/09/2001 CIA-RDP86-00513R001548730010-2"

"APPROVED FOR RELEASE: 08/09/2001 CIA-RDP86-00513R001548730010-2

ACCESSION NR: AR4015647 S/0081/63/000/022/0440/0440

SOURCE: RZh. Khimiya, Abs. 22N87

AUTHOR: Atroshchenko, V. I.; Shchedrinskaya, Z. M.

TITLE: Catalysts for the heterogeneous oxidation of natural gas to formaldehyde and methanol

CITED SOURCE: Tr. Khar'kovsk. politekhn. in-ta, v. 39, 1962, 19-24

TOPIC TAGS: catalysis, oxidation, oxidation catalyst, natural gas, natural gas oxidation, heterogeneous oxidation, formaldehyde, methanol, metal oxide catalyst

TRANSLATION: As catalysts for the partial oxidation of natural gas (93% CH_4, 2% O_2), the authors investigated the metal oxides ZnO, CuO, Al_2O_3, Fe_2O_2, MnO_2, MoO_3, Cr_2O_3, V_2O_5, BaO, Ag_2O, ThO_2, U_2O_5 and $AlPO_4$, glass wool, asbestos and pumice (also used as carriers), as well as Cu-Ni and Cu tubing. The catalysts were prepared from the carbonate or ammonium salts by precipitation, filtration, and baking at 600-700C, followed by briquetting, and by the application of nitrate solutions to heated pumice, drying at 110C, and baking for 3 hrs at 750C. The carrier, 3% by weight MoO_3, was prepared as follows: the carrier was treated

Card 1/2

APPROVED FOR RELEASE: 08/09/2001 CIA-RDP86-00513R001548730010-2"

"APPROVED FOR RELEASE: 08/09/2001 CIA-RDP86-00513R001548730010-2

ACCESSION NR: AR4015647

with a solution of $(NH_4)_2MoO_4$, boiled for 45 min., and 12 hrs later the samples were dried for 2 hrs at 110C and baked for 3 hrs at 750C (for glass wool, at 450C). The authors then studied single, double, and triple catalysts and the effect of the carrier. Determinations of catalytic activity were made at various temperatures (375-500C), volume speeds (15,000-50,000 hr^{-1}), and amounts of catalyst (0.5-50% metal). For each catalyst there is an optimal volume speed and temperature at which a high yield of CH_2O and CH_3OH is obtained. The optimal content of metal applied on pumice is 2-10%. In the presence of metals on carriers, the overall yield of useful products (from the participation of CH_4 in the reaction increases considerably and a selective catalytic action is observed. The most active catalysts are MoO_3, ThO_2, Cr_2O_3, Ag_2O, and a mixture of Ag_2O. Cr_2O_3 on pumice and without it. Triple catalysts are less active than double or single. A high yield of CH_3OH, up to 32.6%, is obtained on Cr_2O_3 and Cu_2O; up to 25% on MoO_3 and Ag_2O. The best carrier is pumice. An outline and description of the process of contact oxidation of natural gas are presented. L.R.

DATE ACQ: 07Jan64 SUB CODE: CH ENCL: 00

Card 2/2

APPROVED FOR RELEASE: 08/09/2001 CIA-RDP86-00513R001548730010-2"

"APPROVED FOR RELEASE: 08/09/2001 CIA-RDP86-00513R001548730010-2

[illegible] , [illegible]; [illegible]; GAVRYA, [illegible]; [illegible]
[illegible]; ABDULAYEVA, G.A.; TIMOKHINA, [illegible]; [illegible], [illegible]

[illegible] the oxidation processes of natural gas to form formaldehyde and methanol. Zhur.prikl.khim. 38 no.3:[illegible]-[illegible] Mr '65. (MIRA [illegible])

1. Submitted Febr. 27, 1963.

APPROVED FOR RELEASE: 08/09/2001 CIA-RDP86-00513R001548730010-2"

"APPROVED FOR RELEASE: 08/09/2001 CIA-RDP86-00513R001548730010-2

PIROGOV, A.A.; LEVE, Ye.N.; KNASS, Ya.R.; BELIGRENKO, G.I.; KOTIK, P.L.; SHOPENKO, Ya.P.; ZIL'BERG, Ye.S.; PRYAPIK, Ye.P.; VAYNTRAUB, S.S.; ZHIDKOV, V.A.; SHCHEDRINSKIY, L.I.; MOREV, G.P.

Prefabricated blocks of unfired magnesite-chromite brick.
Metallurg 9 no.4:23-24 Ap '64. (MIRA 17:9)

1. Ukrainskiy institut ogneuporov, Nikitovskiy dolomitovyy kombinat i Kommunarskiy metallurgicheskiy zavod.

APPROVED FOR RELEASE: 08/09/2001 CIA-RDP86-00513R001548730010-2"

"APPROVED FOR RELEASE: 08/09/2001 CIA-RDP86-00513R001548730010-2

ZIZEMSKIY, Yefim Il'ich; SOLOV'YEV, V.N., kand. tekhn. nauk, retsenzent; SHCHEDRINSKIY, L.S., inzh., retsenzent; MALIKOV, I.M., kand.tekhn. nauk, nauchn. red.; LESKOVA, L.R., red.; CHISTYAKOVA, R.K., tekhn.red.

[Reliability of radio and electronic apparatus] Nadezhnost' radioelektronnoi apparatury. Leningrad, Sudpromgiz, 1963. 101 p. (MIRA 16:7)
(Electronic industries--Quality control)

APPROVED FOR RELEASE: 08/09/2001 CIA-RDP86-00513R001548730010-2"

"APPROVED FOR RELEASE: 08/09/2001 CIA-RDP86-00513R001548730010-2

SHCHEDRINSKIY, Mikhail Borisovich; VOLEGOV, Aleksandr Vyacheslavovich; MYULLER, Eduard Karlovich. Prinimali uchastiye: OGNEV, A.S., inzh.; BELOV, M.A., inzh.; USTINOV, D.V., inzh., retsenzent; GORSHKOLEPOV, N.A., otv. red.; ROMANOVA, L.A., red.izd-va; SABITOV, A., tekhn. red.; IL'INSKAYA, G.M., tekhn. red.

[Asbestos concentration] Obogashchenie asbestovykh rud. Moskva, Gosgortekhizdat, 1962. 233 p. (MIRA 15:7)
(Asbestos) (Ore dressing)

APPROVED FOR RELEASE: 08/09/2001 CIA-RDP86-00513R001548730010-2"

"APPROVED FOR RELEASE: 08/09/2001 CIA-RDP86-00513R001548730010-2

SHCHEDRINSKIY, M.B.; SIDENKO, I.P.

Determining and calculating technological indices in chrysotile-asbestos ore dressing. Nauch. trudy VNIIasbest no.3:3-40 '62. (MIRA 16:11)

APPROVED FOR RELEASE: 08/09/2001 CIA-RDP86-00513R001548730010-2"

"APPROVED FOR RELEASE: 08/09/2001 CIA-RDP86-00513R001548730010-2

MOROZOV, Nikolay Aleksandrovich, kand. tekhn. nauk; SHCHEDRO, David Abramovich, inzh.; MEDVEDEVA, Ye.T., red.

[Manufacture of one-piece compressed furniture with simultaneous finishing] Izgotovlenie tsel'nopressovannoi mebeli s odnovremennoi otdelkoi. Moskva, Lesnaia promyshlennost', 1965. 158 p. (MIRA 18:8)

APPROVED FOR RELEASE: 08/09/2001 CIA-RDP86-00513R001548730010-2"

"APPROVED FOR RELEASE: 08/09/2001 CIA-RDP86-00513R001548730010-2

[illegible] tekhn. nauk;
[illegible], red.

[Pressing of furniture parts from ground wood] Presovanie mebel'nykh detalei iz lamel'nogo drevesiny. Moskva, Tsentr. nauchno-issl. in-t informatsii i ekhniko-ekon. issledovanii po lesnoi, tsellyulozno-bumazhnoi, derevообрабатывающей promyshl. i lesnomu khoz., 1964. [illegible] p. (MIRA 17:11)

1. Tsentral'nyy nauchno-issledovatel'skiy institut fanery i mebeli.

APPROVED FOR RELEASE: 08/09/2001 CIA-RDP86-00513R001548730010-2"

"APPROVED FOR RELEASE: 08/09/2001 CIA-RDP86-00513R001548730010-2

ROZHDESTVENSKIY, D.A., kandidat tekhnicheskikh nauk; RAZGON, L.V., inzhener; SHCHEDRO, V.P.

Improvement of catalytic splitting of fats at the "Novyy Mylovar" Plant. Masl.zhir.prom. 17 no.1.12-15 Ja '52. (MLRA 10:9)

1. Institut narodnogo khozyaystva im. Plekhanova (for Rozhdestvenskiy).
2. Zavod "Novyy Mylovar" (for Razgon, Shchedro).
(Oils and fats)

APPROVED FOR RELEASE: 08/09/2001 CIA-RDP86-00513R001548730010-2"

"APPROVED FOR RELEASE: 08/09/2001 CIA-RDP86-00513R001548730010-2

GERNOIMUS, R.; SHCHEDRODAROVA, Yu.; BABAYEVA, Z.

Using the mathematical method in planning freight haulage. Avt. transp. 39 no.1:45-47 Ja '61. (MIRA 14:3)

1. Nauchno-issledovatel'skiy institut avtomobil'nogo transporta.
(Transportation, Automotive--Freight)

APPROVED FOR RELEASE: 08/09/2001 CIA-RDP86-00513R001548730010-2"

"APPROVED FOR RELEASE: 08/09/2001 CIA-RDP86-00513R001548730010-2

SHCHEDROLOSEV, V.

Grinding and adjustment of tools. Politekh. obuch. no.8:88-89 Ag '59. (MIRA 12:10)

1.Srednyaya shkola No.22, Kherson.
(Tools)

APPROVED FOR RELEASE: 08/09/2001 CIA-RDP86-00513R001548730010-2"

"APPROVED FOR RELEASE: 08/09/2001 CIA-RDP86-00513R001548730010-2

SHCHEDROLOSEV, V.V.

First class on manual training in grade five. Politekh. obuch. no.9:32-33 S '59. (MIRA 12:12)

1. Srednyaya shkola No.22 g.Khersona.
(Kherson--Manual training)

APPROVED FOR RELEASE: 08/09/2001 CIA-RDP86-00513R001548730010-2"

"APPROVED FOR RELEASE: 08/09/2001 CIA-RDP86-00513R001548730010-2

SHCHEDROV, Ivan Mikhaylovich; LIPETS, Yu.G., red.; POPOVA, V.I., mladshiy red.; GOLITSYN, A.V., red.kart; BURLAKA, N.P., tekhn.red.

[Hanoi] Khanoi. Moskva, Gos.izd-vo geogr.lit-ry, 1961. 76 p. (MIRA 14:6)

(Hanoi—Description)

APPROVED FOR RELEASE: 08/09/2001 CIA-RDP86-00513R001548730010-2"

"APPROVED FOR RELEASE: 08/09/2001 CIA-RDP86-00513R001548730010-2

L 51478-65 EWP(t)/EPR/EPA(s)-2/EWG(v)/EPA(w)-2/EWA(h)/EWP(j)/EWP(z)/EWT(m)/EWP(i)/EPF(c)/EPF(n)-2/EPA(bb)-2/EWP(b)/T/EWA(d)/EWA(l)/EWP(e) Pc-4/Pe-5/Pr-4/Ps-4/Pt-7/Pab-10/Peb IJP(c) RM/WH/WW/JD/JG/WB

AM5015766 BOOK EXPLOITATION 669.14.018.45(083) UR/

91
81
B+1

Shchedrov, K. P.; Gakman, E. L.

Heat-resistant materials; a handbook (Zharostoykiye materialy; spravochnoye posobiye) Moscow, Izd-vo "Mashinostroyeniye," 1965. 166 p. illus., biblio., tables. 7800 copies printed.

TOPIC TAGS: oxidation, oxidation resistant material, heat resistant material, metal oxidation, nonmetallic material oxidation, metallic coating, nonmetallic coating

PURPOSE AND COVERAGE: This book is intended for engineering personnel dealing with problems connected with tests and use of oxidation-resistant materials. It may also be useful to workers in plants and laboratories. Data on the physical, chemical, and technological properties of steels, special alloys, and cast irons are systematized and presented. Characteristics and properties of nonmetallic materials such as cermets and plastics are reviewed along with methods of their fabrication. The book also contains information on oxidation- and heat-resistant coatings.

Card 1/4

APPROVED FOR RELEASE: 08/09/2001 CIA-RDP86-00513R001548730010-2"

"APPROVED FOR RELEASE: 08/09/2001 CIA-RDP86-00513R001548730010-2

L 51478-65

AM5015766

TABLE OF CONTENTS:

Card 2/4

APPROVED FOR RELEASE: 08/09/2001 CIA-RDP86-00513R001548730010-2"

"APPROVED FOR RELEASE: 08/09/2001 CIA-RDP86-00513R001548730010-2

L 51478-65
AM5015766

9

Card 3/4

APPROVED FOR RELEASE: 08/09/2001 CIA-RDP86-00513R001548730010-2"

"APPROVED FOR RELEASE: 08/09/2001 CIA-RDP86-00513R001548730010-2

L 51478-65

AM5015766

SUB CODE: MM, MT SUBMITTED: 06Jan65 NO REF SOV: 075

OTHER: 017

Card 4/4

APPROVED FOR RELEASE: 08/09/2001 CIA-RDP86-00513R001548730010-2"

"APPROVED FOR RELEASE: 08/09/2001 CIA-RDP86-00513R001548730010-2

CA SHCHEDROV, M D

20

Aeration of cement mills. M. D. Shchedrov. *Cement* 17, No. 1, 23-4(1951).—The problem of dust control in cement grinding rooms is discussed. M. Hoch

APPROVED FOR RELEASE: 08/09/2001 CIA-RDP86-00513R001548730010-2"

"APPROVED FOR RELEASE: 08/09/2001 CIA-RDP86-00513R001548730010-2

SHCHEDROV, M.D.

Lengthening the life span of drive shafts. TSement 17 no.6:21-22 N-D '56. (MLRA 9:8)

1. Tsementnyy zavod "Komsomolets".
(Shafts and shafting)

APPROVED FOR RELEASE: 08/09/2001 CIA-RDP86-00513R001548730010-2"

"APPROVED FOR RELEASE: 08/09/2001 CIA-RDP86-00513R001548730010-2

BYLOV, V.D.; ZNAMENSKIY, Yu.D.; KAPITONOVA, L.P.; SHCHEDROV, M.S.

Sulfuric acid method of recovering nitrogen oxides from incompletely oxidized gases. Zhur.prikl.khim. 35 no.7:1503-1505 Jl '62. (MIRA 15:8)

(Nitrogen oxide)

APPROVED FOR RELEASE: 08/09/2001 CIA-RDP86-00513R001548730010-2"

"APPROVED FOR RELEASE: 08/09/2001 CIA-RDP86-00513R001548730010-2

SHCHEDROV, N.

188T107

[redacted] Periodical Abstrac

USSR/Radio - Receivers Mar 51

"A 1-V-0 Receiver Using Low-Plate Voltage (Design Section, Zhitomir Radio Club)," N. Shchedrov

"Radio" No 3, p 29

The low-plate-voltage 0-V-1 receiver described in "Radio" No 3, 1950 (using a 6K7 or an SO-257) is not economical or sensitive. The receiver described here uses 2 SB-242's, connected as triodes, and has long- and medium-wave bands. The plate voltage (4.5 v) is obtained from flashlight batteries.

188T107

APPROVED FOR RELEASE: 08/09/2001 CIA-RDP86-00513R001548730010-2"

"APPROVED FOR RELEASE: 08/09/2001 CIA-RDP86-00513R001548730010-2

L 00079-66 EWT(d)/FSD-2/EWP(1) IJP(c) BB/GG
ACCESSION NR: AR5013617 UR/0271/65/000/004/B032/B033
681.142.-42.7

SOURCE: Ref. zh. Avtomatika, telemekhanika i vychislitel'naya tekhnika. Svodnyy tom, Abs. 4B242

AUTHOR: Shchedrov, N. I. 44

TITLE: Magnetic-memory counting trigger

CITED SOURCE: Sb. Ustroystva i elementy prom. telemekhan. Kiyev, 1964, 73-76

TOPIC TAGS: trigger circuit

TRANLSATION: It is noted that in the remote-control equipment the potential memory must be preserved in case of a power interruption. A register is used for this purpose in which magnetic elements fix its position. A trigger circuit of the register is presented. Figs. 2.

SUB CODE: DP ENCL: 00

Card 1/1

APPROVED FOR RELEASE: 08/09/2001 CIA-RDP86-00513R001548730010-2"

"APPROVED FOR RELEASE: 08/09/2001 CIA-RDP86-00513R001548730010-2

L 8608-66 EWT(d)/EWP(1) IJP(c) BB/GG

ACC NR: AR5014366 SOURCE CODE: UR/0271/65/000/005/B061/B061

SOURCE: Ref. zh. Avtomatika, telemekhanika i vychislitel'naya tekhnika. Svodnyy tom, Abs. 5B441

37
B

AUTHOR: Shchedrov, N. I.44; Ponomarev, A. I.44

TITLE: Angle-to-code converter 16C,44

CITED SOURCE: Sb. Ustroystva i elementy prom. telemekhan. Kiyev, 1964, 109-114

TOPIC TAGS: angle to code converter, analog digital converter

TRANSLATION: The shortcomings of existing angle-to-code converter types are noted; the new converter (shaft digitalizer) has no such shortcomings. The new 6-digit sensor is housed in a diamagnetic cylinder. At this cylinder bottom and on its top, three heads are staggered at an angle of 120° to each other. The rotor

Card 1/2 UDC: 681.142.621

APPROVED FOR RELEASE: 08/09/2001 CIA-RDP86-00513R001548730010-2"

"APPROVED FOR RELEASE: 08/09/2001 CIA-RDP86-00513R001548730010-2

L 62255-65 EWT(d)/EED-2/EWP(1) IJP(c) GG/BB

ACCESSION NR: AP5016090 UR/0302/65/000/002/0039/0041
621.314.283

AUTHOR: Luchenitser, I. A.; Fridshtand, D. A.; Shchedrov, N. I.

TITLE: Transistorized analog-to-digital converter

SOURCE: Avtomatika i priborostroyeniye, no. 2, 1965, 39-41

TOPIC TAGS: analog to digital converter

ABSTRACT: The development of a new analog-to-digital converter is reported. The measurand (voltage) is converted into a time interval by a transistor sawtooth generator and a balance detector. The fixed-frequency pulses are applied to a scaler which yields code digits. These technical characteristics are reported: input voltage, 0—2.5 v; time of conversion of one parameter, 10 msec; pulse-generator frequency, 100 kc; conversion sensitivity, 2.5 mv; discrete error, ±0.05%; fundamental conversion error at 20±3C is ±0.5%; additional error per 10C is ±0.3%; input resistance, 1 Mohm. The converter is intended for "on-demand" telemetering systems and similar applications. Orig. art. has: 2 figures and 1 table.

Card 1/2

APPROVED FOR RELEASE: 08/09/2001 CIA-RDP86-00513R001548730010-2"

"APPROVED FOR RELEASE: 08/09/2001 CIA-RDP86-00513R001548730010-2

L 62255-65

ACCESSION NR: AP5016090

ASSOCIATION: none

SUBMITTED: 00 ENCL: 00 SUB CODE: DP, EC

NO REF SOV: 001 OTHER: 000

Card 2/2

APPROVED FOR RELEASE: 08/09/2001 CIA-RDP86-00513R001548730010-2"

"APPROVED FOR RELEASE: 08/09/2001 CIA-RDP86-00513R001548730010-2

L 22133-65 EEC-4/EEC(k)-2/EWA(h)/EWT(d)/EWT(1) Pg-4/Pk-4/Pl-4/Po-4/Pq-4/Peb ASDA-5
RH

ACCESSION NR: AP5001743 S/0302/64/000/004/0045/0047

AUTHOR: Luchenitser, I. A.; Mochalova, V. S.; Svyatskaya, N. V.; Fridshtand, D. A.; Shchedrov, N. I.

TITLE: Digital-indicator-type measuring instrument operating on demand

SOURCE: Avtomatika i priborostroyeniye, no. 4, 1964, 45-47

TOPIC TAGS: measuring instrument, digital measuring instrument

ABSTRACT: The blueprint of a 12-parameter (selected out of 600) measuring instrument is described. The instrument comprises two principal parts: (a) a switch panel with pushbuttons, relays, and a supply unit and (b) a digital instrument panel with digital converters and indicators. Three pulse generators with 100, 80, and 60 kc are provided. These characteristics are expected: time of digital conversion of one parameter, 10 msec; time of scanning 12 channels, 2 sec; maximum error, 1.1%. A laboratory hookup for two channels was stable

Card 1/2

APPROVED FOR RELEASE: 08/09/2001 CIA-RDP86-00513R001548730010-2"

"APPROVED FOR RELEASE: 08/09/2001 CIA-RDP86-00513R001548730010-2

L 22133-65

ACCESSION NR: AP5001743

in operation." Orig. art. has: 2 figures.

ASSOCIATION: Institut avtomatiki Goskomiteta po priborostroyeniyu Gosplana SSSR (Institute of Automation, State Committee on Measuring Instruments, Gosplan SSSR)

SUBMITTED: 00 ENCL: 00

SUB CODE: IE NO REF SOV: 000 OTHER: 000

Card 2/2

APPROVED FOR RELEASE: 08/09/2001 CIA-RDP86-00513R001548730010-2"

"APPROVED FOR RELEASE: 08/09/2001 CIA-RDP86-00513R001548730010-2

L 20991-66 EWT(d)/EWT(1)/EWP(1)/EWA(h) IJP(c) BB/GG

ACCESSION NR: AP5014006 UR/0119/65/000/005/0027/0028
621.3.042.15:621.314

15
13
B

AUTHOR: Butayev, G. M. (Candidate of technical sciences); Shchedrov, N. I. (Engineer)

TITLE: Angle-to-code contactless converter with ferrite sensing elements

160,47 25

SOURCE: Priborostroyeniye, no. 5, 1965, 27-28

TOPIC TAGS: angle to code converter, contactless converter

ABSTRACT: The development is reported of a new angle-to-Gray-code converter in which the on-off switching is effected by copper-foil segments passing through the gap of a very sensitive ferrite core. The sensing element comprises a transistor and a 3-winding ferrite-core transformer connected to form a nonsinusoidal-wave oscillator. Insertion and withdrawal of the copper segment result in starting and stopping the oscillations, with the oscillator functioning as a low-resistance switch. One sensing element is required for every digit of the converter. A wire-saving time-sequence 50-cps-supplied circuit is envisaged for transmitting many-digit signals to a receiver. An experimental model of the converter was

Card 1/2

APPROVED FOR RELEASE: 08/09/2001 CIA-RDP86-00513R001548730010-2"

"APPROVED FOR RELEASE: 08/09/2001 CIA-RDP86-00513R001548730010-2

ACC NR: AP6036062 (A, N) SOURCE CODE: UR/0132/66/000/005/0033/0034

AUTHOR: Luchenitser, I. A.; Shchedrov, N. I.

ORG: none

TITLE: Contactless device with an automatic time delay for reading out measurements

SOURCE: Mekhanizatsiya i avtomatizatsiya upravleniya, no. 5, 1966, 33-34

TOPIC TAGS: data read out, transistorized circuit, switching circuit

ABSTRACT: A contactless switching device is described which can be used in a centralized control system for connecting any one of a large number of sensors to a measurement device by a simple depression of a button. The device operates in the following manner: In the initial state a metallic plate made of diamagnetic material is in the gap of a ferrite core with square loop characteristics. As a result of this, a transistor generator is prevented from oscillating. As the button is depressed the diamagnetic plate leaves the gap and oscillations are established. The 65 kc oscillation after filtering and detection, clear a series of flip-flops into the zero position. As the button is released an elastic dielectric plate forces the diamagnetic plate back into the gap and oscillations of the generator cease, which causes the flip-flop circuit to switch. Thus, the automatic time delay is produced by the natural interval of time be-

UDC: 621.398.92

Card 1/2

APPROVED FOR RELEASE: 08/09/2001 CIA-RDP86-00513R001548730010-2"

"APPROVED FOR RELEASE: 08/09/2001 CIA-RDP86-00513R001548730010-2

ACC NR: AT7004476 SOURCE CODE: UR/3245/66/000/002/0077/0082

AUTHOR: Shchedrov, N. I.

ORG: Kiev Institute of Automation (Kiyevskiy institut avtomatiki)

TITLE: A null unit of a digital converter using silicon transistors (a voltage-time converter)

SOURCE: Kharkov. Institut gornogo mashinostroyeniya, avtomatiki i vychislitel'noy tekhniki. Pribory i sistemy avtomatiki, no. 2, 1966. Promyshlennaya telemekhanika (Industrial telemechanics), 77-82

TOPIC TAGS: silicon transistor, analog digital converter, temperature characteristic, time measurement, capacitor, digital system/ MPGT capacitor

ABSTRACT: A null unit using silicon transistors has been developed for a digital converter which converts a voltage to a time signal. The design has a high precision and an improved temperature stability. The voltage to be measured (u_x) is compared with a linearly increasing sawtooth voltage (u_s). The null unit (the measurement device) indicates the instant when the sign of the difference between u_x and u_s changes. The time measurement is thus proportional to the rise time for the sawtooth voltage u_s to equal u_x. The sawtooth voltage is generated by an RC circuit with a discharge transistor. The circuit is charged by a stabilized 150-V voltage, and the u_s capacitor break-down voltage is 2.9 V. The nonlinearity of u_s is ± 0.1%. The

Card 1/2

APPROVED FOR RELEASE: 08/09/2001 CIA-RDP86-00513R001548730010-2"

"APPROVED FOR RELEASE: 08/09/2001 CIA-RDP86-00513R001548730010-2

YUGOSLAVIA/Organic Chemistry. Synthetic Organic Chemistry. G

Abs Jour: Ref Zhur-Khimiya, No 22, 1958, 74038.

Author : V. Hahn, Z. Stojanac, O. Shchedrov, N. Pravdich-Sladovich, S. Tomashich, D. Emer.

Inst :

Title : Amides of Thiopyromucic Acid. Thioamides. Report I.

Orig Pub: Croat. Chem. acta, 1957, 29, No 3-4, 319-327.

Abstract: OCH=CHCH=CCSNRR' [Ia to Ir, in which R = R' = H (Ia); R = H, R' = CH_3 (Ib); R = H, R' = C_2H_5 (Ic); R = H, R' = $C_6H_5CH_2$ (Id); R = H, R' = C_6H_5 (Ie); R = H, R' = 2-$CH_3C_6H_4$ (If): R = H, R' = 3-$CH_3C_6H_4$ (Ig); R = H, R' = 4-$CH_3C_6H_4$ (Ih); R = H, R' = 2-$C_{10}H_7$ (Ii); R = H, R' = 4-$CH_3OC_6H_4$ (Ij); R = H, R' =

Card : 1/7

APPROVED FOR RELEASE: 08/09/2001 CIA-RDP86-00513R001548730010-2"

YUGOSLAVIA/Organic Chemistry. Synthetic Organic Chemistry.

Abs Jour: Ref Zhur-Khimiya, No 22, 1958, 74038.

R' = 4-$C_2H_5OC_6H_4$ (Ik); R = R' = C_2H_5 (Il); R = = R' = $H_2C(CH_2)_3CH_2$ (Im); R = CH_3, R' = C_6H_5 (In); R = C_2H_5, R' = C_6H_5 (Io); R = $C_6H_5CH_2$, R' = C_6H_5 (Ip); R = R' = C_6H_5 (Iq), and R = C_6H_5, R' = = COC_6H_5 (Ir)] and S-methyl-iso-thicanilide of thiopyromucic acid (II) were synthetized with a view to study their biological properties.

Ia to Iq were prepared of corresponding OCH=CHCH= CCONRR'-s (IIIa to IIIq) and P S , and Ir and II were prepared by the action of C H COCl (IV) and (CH) SO (V) on Ie. 22.0 g of OCH=CHCH=CCOCl (VI) is added to 23.2 g of phenetidine in 200 ml of 5%-ual NaOH in 20 min.; 1 hour later it is filtered and IIIk is obtained, yield 81%, melt. p. 130 to 131° (from dilute

Card : 2/7

"APPROVED FOR RELEASE: 08/09/2001 CIA-RDP86-00513R001548730010-2

YUGOSLAVIA/Organic Chemistry. Synthetic Organic Chemistry. G

Abs Jour: Ref Zhur-Khimiya, No 22, 1958, 74038.

initial III-s, their amounts in g, boil. p. in °C/mm, melt. p. in °C, amounts of C H N in ml and of P_2S_5 in g, reaction duration in min., purification method, yield of I in %, its boiling point in °C/mm and its melting point in °C are enumerated: IIIa, 3, -, 141 to 142, 15, 5.7, 40, B, 84, 160 to 162/15, 130 to 131 (from benzene + alcohol); IIIb, 4, -, 62 to 64, 8, 7.1, 40, -, 153 to 157/18, 70 to 71 (from benzene + petroleum ether); IIIc, 17, 136 to 138/15, 34 to 34, 45, 13.6, 45, B, 84, 155 to 160/16, 148 to 150/11, - (liquid, $n^{20}D$ = 1.6236, d = 1.1629); IIId, 5, 111, -, 15, 2.8, 45, B, 98, -, 49 to 50 (from petroleum ether); IIIe, 10, -, 123 to 124, 20, 7.2, 60, A, 86, -, 107 to 108 (from

Card : 4/7

YUGOSLAVIA/Organic Chemistry. Synthetic Organic Chemistry. G

Abs Jour: Ref Zhur-Khimiya, No 22, 1958, 74038

APPROVED FOR RELEASE: 08/09/2001 CIA-RDP86-00513R001548730010-2"

benzene + petroleum ester), IIIf, 2, 52, 198 to 200/9, 66 to 67 (from benzene + petroleum ether), 5, 1, 11, 40, A, 88, -, 85 to 85.5 (from benzene + petroleum ether); IIIg; 5, -, 86 to 87, 5, 22, 40, A, 67, -, 46.5 to 47 (from dilute CH_3OH); IIIh, 10, -, 108 to 109, 20, 8.8, 45, A, 85, -, 88 to 89 (from benzen + petroleum ether); IIIi, 1, -, 150 to 152, 7.1, 120, A, 84, -, 129.5 to 130 (from dilute alochol); IIIj, 2.17, -, 104 to 105, 5, 0.9, 40, A, 91, -, 129 to 130 (from CH_3OH); IIIk, 10, -, 129 to 130, 20, 7.2, 90, A, 94, -, 80 to 81 (from benzene + petroleum ether); IIIl, 12, 134 to 136/18, -, 40, B, 84, 158 to 163/15, 143 to 144/5, - (liquid,

Card : 5/7

YUGOSLAVIA/Organic Chemistry. Synthetic Organic Chemistry. G

Abs Jour: Ref Zhur-Khimiya, No 22, 1958, 74038.

"APPROVED FOR RELEASE: 08/09/2001 CIA-RDP86-00513R001548730010-2

YUGOSLAVIA/Organic Chemistry. Synthetic Organic Chemistry. G

Abs Jour: Ref Zhur-Khimiya, No 22, 1958, 74038.

NaOH, heated 30 min. at about 100°, cooled, and II is produced, yield 94%, melt. p. 41.5 to 42° (from 80%-ual alcohol).

Card : 7/7

APPROVED FOR RELEASE: 08/09/2001 CIA-RDP86-00513R001548730010-2"

"APPROVED FOR RELEASE: 08/09/2001 CIA-RDP86-00513R001548730010-2

L 10642-66 EWT(m)/EWP(w)/EWP(f)/EWP(v)/T-2/EWP(k)/ETC(m) WW/EM

ACC NR: AT6001026 SOURCE CODE: UR/2563/65/000/247/0094/0098

AUTHOR: Dvoretskiy, K. P.; Nevinskiy, V. V.; Shchedrov, V. B.

ORG: Leningrad Politechnic Institute (Leningradskiy politekhnicheskiy institut)

28
27 B+1

TITLE: A similarity method for the design of the radial stage of a centripetal turbine

SOURCE: Leningrad. Politekhnicheskiy institut. Trudy, no. 247, 1965, Turbomashiny (Turbomachines), 94-98

TOPIC TAGS: centripetal turbine, radial stage, design method, similarity method

ABSTRACT: The proposed similarity method for determining optimum parameters of the radial stage of a centripetal turbine is based on mathematical treatment of experimental data obtained from a series of similar model turbines. The power N, the gas flow rate G, and the efficiency η of a turbine are the functions of the following parameters:

$$N = f(p_0, p_2, T_0, R, k, u_1, \nu, x_i);$$

$$G = f(p_0, p_2, T_0, R, k, u_1, \nu, x_i);$$

$$\eta = f(p_0, p_2, T_0, R, k, u_1, \nu, x_i),$$

Card 1/4

APPROVED FOR RELEASE: 08/09/2001 CIA-RDP86-00513R001548730010-2"

"APPROVED FOR RELEASE: 08/09/2001 CIA-RDP86-00513R001548730010-2

L 10642-66

ACC NR: AT6001026

where p_0 and T_0 are the total pressure and gas temperature in front of the nozzle; p_2 is the static pressure behind the rotor; u_1, the circumferential velocity; ν, the kinematic viscosity; k, adiabatic expansion index; R, the gas constant; and x_i includes a series of design parameters such as the rotor diameter D_1, rotor blade width b, and others given in Fig. 1. Introducing dimensionless parameters, we get:

$$\overline{N} = \frac{NRT_0}{D_1^2 u_1^3 p_0}; \quad \overline{G} = \frac{GRT_0}{D_1^2 u_1 p_0}; \quad \mathrm{Re}_r = \frac{u_1 D_1}{\nu}; \ \eta; \ k;$$

$$\chi = \frac{u_1}{\sqrt{\frac{2k}{k-1} RT_0 \left(1 - \sigma^{-\frac{k-1}{k}}\right)}}; \quad \sigma = \frac{p_0}{p_2}; \quad \overline{x}_i.$$

Taking into account the effect of the nozzle angle α_1, the relative width of the rotor blade $\tau = b/D_1$, the ratio of the rotor-exit cross section area to the rotor inlet cross section area κ, and the blade twist angle β_2, then the following parameters have to be determined experimentally:

$$\eta = f(\tau, \alpha_1, \varkappa, \beta_2, \chi, \sigma);$$
$$G = f(\tau, \alpha_1, \varkappa, \beta_2, \chi, \sigma);$$
$$N = f(\tau, \alpha_1, \varkappa, \beta_2, \chi, \sigma).$$

Based on experimental studies of the performance characteristics of 27 radial centripetal turbines of the same type at various valves of τ, α_1, and κ, and constant

Card 2/4

APPROVED FOR RELEASE: 08/09/2001 CIA-RDP86-00513R001548730010-2"

"APPROVED FOR RELEASE: 08/09/2001 CIA-RDP86-00513R001548730010-2

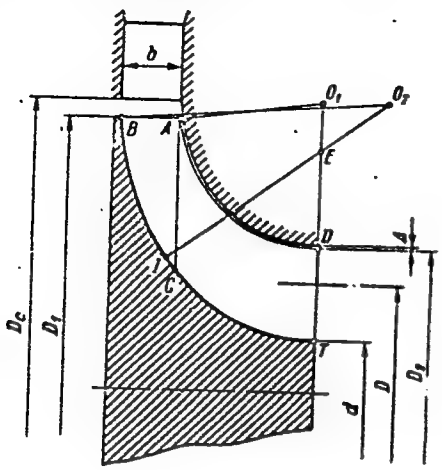

Fig. 1. Rotor profile diagram

$z_k = 16$, $D_1 = 160$ mm, $\beta_{2k} = 63°$, and

$$\frac{d}{D_1} = 0{,}275; \quad \frac{D_c}{D_1} = 1{,}1; \quad \frac{\Delta}{D_1} = 3{,}13 \cdot 10^{-3},$$

graphs of the optimum relationship between various parameters of the turbine stages were obtained which are to be used in the design of this type of turbine. Orig. art. has: 4 figures.

 [PS]

APPROVED FOR RELEASE: 08/09/2001 CIA-RDP86-00513R001548730010-2"

"APPROVED FOR RELEASE: 08/09/2001 CIA-RDP86-00513R001548730010-2

L 10042-00

ACC NR: AT6001026

SUB CODE: 13/ SUBM DATE: none/ ORIG REF: 002/ ATD PRESS: 4169

0

HW

Card 4/4

APPROVED FOR RELEASE: 08/09/2001 CIA-RDP86-00513R001548730010-2"

"APPROVED FOR RELEASE: 08/09/2001 CIA-RDP86-00513R001548730010-2

L 10773-66 EWP(f)/T-2/ETC(m) WW

ACC NR: AT6001027

SOURCE CODE: UR/2563/65/000/247/0099/0102

AUTHOR: Dvoretskiy, K. P.; Nevinskiy, V. V.; Shchedrov, V. B.

ORG: Leningrad politechnic institute (Leningradskiy politekhnicheskiy institut)

TITLE: Energy loss in the rotor of a centripetal turbine

SOURCE: Leningrad. Politekhnicheskiy institut. Trudy, no. 247, 1965. Turbomashiny (Turbomachines), 99-102

TOPIC TAGS: energy loss calculation, centripetal turbine, turbine rotor, turbine

ABSTRACT: The energy loss in a turbine rotor is usually characterized by the velocity coefficient ψ obtained from the relationship $w_2 = \psi w_{2m}$, where w_2 and w_{2m} are the real and theoretical relative velocities in the exit cross section of the rotor. While in an axial-flow turbine $1 - \psi^2$ represents the energy losses in the rotor, in the case of a radial turbine, such a loss is not represented by $1 - \psi^2$ if ψ is calculated by the above equation. Therefore, the following expression is suggested for determining ψ:

$$w_2 = \sqrt{\psi^2(2\Delta i_k + w_1^2) - u_1^2 + u_2^2},$$

where Δi_k is the enthalpy drop in the rotor and u_2 is the circumferential velocity in the exit cross section. Other designations are given in Fig. 1. Calculated from this

Card 1/3

APPROVED FOR RELEASE: 08/09/2001 CIA-RDP86-00513R001548730010-2"

"APPROVED FOR RELEASE: 08/09/2001 CIA-RDP86-00513R001548730010-2

L 10773-66

ACC NR: AT6001027

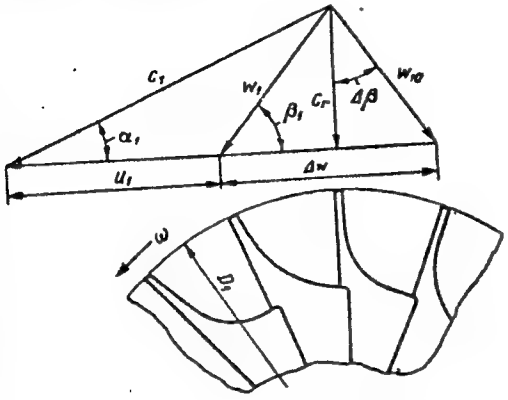

Fig. 1. Kinematic parameters at the inlet cross section of a rotor

expression, $1 - \psi^2$ represents the energy loss in the rotor of a radial turbine. This permits a comparison of the energy losses in both the axial and radial turbine rotors. Considering that $u_1 = wD_1'/2$, ψ is determined by the Reynold's number $Re = c_{1r}D_1\gamma_1/\mu$ and c_{1u}/u_1; the latter parameter is the ratio between the Coriolis and the centrifugal forces. This parameter is considered to be both a kinematic characteristic of the performance of a turbine stage and a dynamic factor which affects the flow of gas in a rotor. The energy losses in a radial turbine rotor with an impact flow may be

Card 2/3

APPROVED FOR RELEASE: 08/09/2001 CIA-RDP86-00513R001548730010-2"

"APPROVED FOR RELEASE: 08/09/2001 CIA-RDP86-00513R001548730010-2

L 10773-66

ACC NR: AT6001027

calculated using the maximum energy consumption coefficient by the following expression:

$$\frac{\psi^2}{\psi^2_{max}} = 1 - \frac{\frac{1}{2}(c_1 \cos\alpha_1 - u_1 + c_{1r} \operatorname{tg} \Delta\beta)^2}{\Delta i_\kappa + \frac{w_1^2}{2}},$$

[PS]

(see Fig. 1). Orig. art. has: 3 figures and 4 formulas.

SUB CODE: 10/ SUBM DATE: none/ ORIG REF: 003/ ATD PRESS: 4168

Card 3/3

APPROVED FOR RELEASE: 08/09/2001 CIA-RDP86-00513R001548730010-2"

"APPROVED FOR RELEASE: 08/09/2001 CIA-RDP86-00513R001548730010-2

APPROVED FOR RELEASE: 08/09/2001 CIA-RDP86-00513R001548730010-2"

"APPROVED FOR RELEASE: 08/09/2001 CIA-RDP86-00513R001548730010-2

ZINCHENKO, V.V., inzh.; SAMSONOV, M.T., dotsent; SHCHEDROV, V.K., dotsent

Mining geology conditions in constructing and exploiting mines of the Karaganda coal basin. Izv. vys. ucheb. zav.; gor. zhur. no.12:13-20 '61. (MIRA 16:7)

1. Kombinat "Karagandaugol'" (for Zinchenko). 2. Karagandinskiy politekhnicheskiy institut (for Samsonov, Shchedrov). Rekomendovana kafedroy geologii Karagandinskogo politekhnicheskogo instituta.
(Karaganda Basin—Coal geology)

APPROVED FOR RELEASE: 08/09/2001 CIA-RDP86-00513R001548730010-2"

"APPROVED FOR RELEASE: 08/09/2001 CIA-RDP86-00513R001548730010-2

[illegible], V.I., [illegible] "[illegible] of [illegible] of penicillin in the treatment of infected burns and their complications." [illegible], 1953. 13 pp (Lh r'kov [illegible] Inst), 200 copies (KL,26-57,112)

APPROVED FOR RELEASE: 08/09/2001 CIA-RDP86-00513R001548730010-2"

"APPROVED FOR RELEASE: 08/09/2001 CIA-RDP86-00513R001548730010-2

M

Molecular Theory of Friction. V. S. Shchedrov (*Zhur. Tekhn. Fiziki*, 1947, **17**, 537–542; *C. Abs.*, 1950, **44**, 3334).—[In Russian]. Considerations of molecular interaction between projecting parts of two surfaces lead to a formula in which the coeff. of friction is represented as a function of several parameters characterizing the roughness of the surface, the elasticity, and of parameters depending on the molecular structure of the surface. In particular, friction increases with the height of the molecular field of the surface and with the coeff. of molecular interaction, and decreases with increasing modulus of elasticity, relative roughness, and Poisson's ratio. Whereas the qualitative predictions are consistent with the experimental results of Kragel'sky (*ibid.*, 1943, **13**, 145), the exponents are different. This, evidently, is due to the mixed molecular-mechanical nature of actual friction.

APPROVED FOR RELEASE: 08/09/2001 CIA-RDP86-00513R001548730010-2"

"APPROVED FOR RELEASE: 08/09/2001 CIA-RDP86-00513R001548730010-2

21-120. Abrasive Wear of Surfaces. N S Shchedrov. *Journal of Technical Physics (U.S.S.R.)*, v. 17, Sept. 1947, p 1019-1026 (In Russian)

A theoretical, mathematical development. Formulas for determination of total wear per unit of time.

ASM-SLA METALLURGICAL LITERATURE CLASSIFICATION

APPROVED FOR RELEASE: 08/09/2001 CIA-RDP86-00513R001548730010-2"

"APPROVED FOR RELEASE: 08/09/2001 CIA-RDP86-00513R001548730010-2

Journal of Technical Physics USSR. Vol. 18, No 4, 1948

Terminasov, Yu.S. (M.I. Kalinin Leningrad Polytechnic Institute), X-ray graphic study of residual tensions of orders II and III in steel fatigue, 517-23

Shchedrov, V.S., Contraction deterioration of the contact surface, 525-8

Sorokina, V.V. and Timofeev, P.V. (All-Union Institute of Electrical Engineering, Moscow), Form of the field for electrostatic lenses, 509-16

"Starting with the laws of mechanics a theory is given for the electrostatic focusing of electron beams. A form of the field for the electrostatic lenses is given which permits electron image formation with the least distortion. The method of calculation and the form of new 'hyperbolic' lenses is given."

Source: GTRSPL, Vol. 1, No. 5

APPROVED FOR RELEASE: 08/09/2001 CIA-RDP86-00513R001548730010-2"

"APPROVED FOR RELEASE: 08/09/2001 CIA-RDP86-00513R001548730010-2

23

Analysis of Dry Sliding Friction on the Basis of Study of Very Small Movements in the Zone of Contact. (In Russian.) I. V. Kragel'skii and V. S. Shchedrov. *Zhurnal Tekhnicheskoi Fiziki* (Journal of Technical Physics), v. 18, June 1948, p. 805-810

Proposes a formula for determination of dry sliding friction, obtained on the basis of Ponselle's theoretical mechanical representation of friction. The basis of the formula is the very small movement of the surface layer.

ASM-SLA METALLURGICAL LITERATURE CLASSIFICATION

APPROVED FOR RELEASE: 08/09/2001 CIA-RDP86-00513R001548730010-2"

"APPROVED FOR RELEASE: 08/09/2001 CIA-RDP86-00513R001548730010-2

USSR/Engineering May 49
Friction
Surfaces - Friction

PA 63/49T32

"Dry Friction and Its Role in Engineering," V. S. Shchedrov, Cand Tech Sci, 3 pp

"Nauka i Zhizn'" No 5

Notes subject of friction has not received adequate attention despite its great importance in all phases of activity. Notes that all the more important results in dry friction research have been achieved by Soviet scientists who have received world recognition for their work; practical applications in

[redacted]

63/49T32

USSR/Engineering (Contd) May 49

industry are increasing rapidly. Explains theories based on interacting molecular fields of rubbing surfaces, and believes that further development of the molecular-mechanical theory of dry friction will not only explain frictional phenomena but also show how to control them.

[redacted]

63/49T32

SHCHEDROV, V. S.

APPROVED FOR RELEASE: 08/09/2001 CIA-RDP86-00513R001548730010-2"

"APPROVED FOR RELEASE: 08/09/2001 CIA-RDP86-00513R001548730010-2

[illegible], [illegible], _____.

[illegible]

[illegible] movement of the [illegible] in the runner-spinning ring. Tekst. prom., 12, [illegible], 1953.

9. Monthly List of Russian Accessions, Library of Congress, April 1953, Uncl.

2

APPROVED FOR RELEASE: 08/09/2001 CIA-RDP86-00513R001548730010-2"

"APPROVED FOR RELEASE: 08/09/2001 CIA-RDP86-00513R001548730010-2

ACHERKAN, Naum Samuilovich, 1872- , doktor tekhnicheskikh nauk, professor, redaktor; BELYAYEV, V.N., dotsent, kandidat tekhnicheskikh nauk; BIDERMAN, V.L., kandidat tekhnicheskikh nauk; BOROVICH, L.S., kandidat tekhnicheskikh nauk; GASHINSKIY, A.G., inzhener; GORODETSKIY, N.Ye., professor, doktor tekhnicheskikh nauk; IVANOV, B.A., professor, doktor tekhnicheskikh nauk; KOLMIYTSEV, A.A., dotsent, kandidat tekhnicheskikh nauk; KRAGEL'SKIY, I.V., professor, doktor tekhnicheskikh nauk; PETRUSEVICH, A.I., doktor tekhnicheskikh nauk; POZDNYAKOV, S.N., dotsent; PONOMAREV, S.D., professor, doktor tekhnicheskikh nauk; PORTUGALOVA, A.A., kandidat tekhnicheskikh nauk; PRONIN, B.A., kandidat tekhnicheskikh nauk; RESHETOV, D.N., professor, doktor tekhnicheskikh nauk; RESHETOV, L.N., professor, doktor tekhnicheskikh nauk; SAVERIN, M.A., professor, doktor tekhnicheskikh nauk; SAVERIN, N.A., kandidat tekhnicheskikh nauk; SLOBODKIN, M.S., inzhener; SPITSYN, N.A., professor, doktor tekhnicheskikh nauk; STOLBIN, G.B., dotsent, kandidat tekhnicheskikh nauk; UMNOV, V.A., inzhener; CHERNYAK, B.Z., kandidat tekhnicheskikh nauk; SHCHEDROV, V.S., dotsent, kandidat tekhnicheskikh nauk.

[Machine parts; collection of materials on calculation and design in two volumes; vol.1] Detali mashin; sbornik materialov po raschetu i konstruirovaniiu. Izd.2., ispr.i dop. Moskva, Gos. nauchno-tekhn. izd-vo mashinostroit. i sudostroit. lit-ry, 1953- . (MLRA 6:11)

(Machinery--Design)

APPROVED FOR RELEASE: 08/09/2001 CIA-RDP86-00513R001548730010-2"

"APPROVED FOR RELEASE: 08/09/2001 CIA-RDP86-00513R001548730010-2

ACHERKAN, N.S., doktor tekhnicheskikh nauk, professor, redaktor; BELYAYEV, V.N., kandidat tekhnicheskikh nauk, dotsent; BIDERMAN, V.L., kandidat tekhnicheskikh nauk; BOROVICH, L.S., kandidat tekhnicheskikh nauk; GASHINSKIY, A.G., inzhener; GORODETSKIY, I.Ye., doktor tekhnicheskikh nauk, professor; IVANOV, B.A., doktor tekhnicheskikh nauk, professor; KOLOMIYTSEV, A.A., kandidat tekhnicheskikh nauk, dotsent; KRAGEL'SKIY, I.V., doktor tekhnicheskikh nauk, professor; MAZYRIN, I.V., inzhener; NIKOLAYEV, G.A., doktor tekhnicheskikh nauk, professor; PETRUSEVICH, A.I., doktor tekhnicheskikh nauk; POZDNYAKOV, S.N., dotsent; PONOMAREV, S.D., doktor tekhnicheskikh nauk, professor; PORTUGALOVA, A.A., kandidat tekhnicheskikh nauk; PRONIN, B.A., kandidat tekhnicheskikh nauk; RESHETOV, D.I., doktor tekhnicheskikh nauk, professor; RESHETOV, L.N., doktor tekhnicheskikh nauk, professor; SAVERIN, M.A., doktor tekhnicheskikh nauk, professor; SAVERIN, M.M., kandidat tekhnicheskikh nauk; SLOBODKIN, M.S., inzhener; SPITSYN, N.A., doktor tekhnicheskikh nauk, professor; STOLBIN, G.B., kandidat tekhnicheskikh nauk, dotsent; UMNOV, V.A., inzhener; CHERNYAK, B.Z., kandidat tekhnicheskikh nauk; SHCHEDROV, V.S., kandidat tekhnicheskikh nauk, dotsent.

[Machine parts; collection of materials on calculation and design in two volumes] Detali mashin; sbornik materialov po raschetu i konstruirovaniiu v dvukh knigakh. Izd.2. Moskva, Gos. nauchno-tekhn. izd-vo mashinostroit.i sudostroit.lit-ry. Vol. 2. 1953. 560 p. (MLRA 6:12)

(Machinery--Design)

APPROVED FOR RELEASE: 08/09/2001 CIA-RDP86-00513R001548730010-2"

"APPROVED FOR RELEASE: 08/09/2001 CIA-RDP86-00513R001548730010-2

SHCHEDROV, V. S.

"Investigation of the Friction and Wear Properties on the Sliding Contacts of Machines." Dr Tech Sci, Moscow Order of Labor Red Banner Higher Technical School imeni Bauman, Min Higher Education USSR, Moscow, 1955. (KL, No 15, Apr 55)

SO: Sum. No. 704, 2 Nov 55 - Survey of Scientific and Technical Dissertations Defended at USSR Higher Educational Institutions (16).

APPROVED FOR RELEASE: 08/09/2001 CIA-RDP86-00513R001548730010-2"

"APPROVED FOR RELEASE: 08/09/2001 CIA-RDP86-00513R001548730010-2

SHCHEDROV, V.S.

Temperatures at sliding contacts. Tren. i izn. mash. no.10:155-296 '55. (MLRA 8:11)

(Mechanical wear) (Bearings (Machinery))

APPROVED FOR RELEASE: 08/09/2001 CIA-RDP86-00513R001548730010-2"

"APPROVED FOR RELEASE: 08/09/2001 CIA-RDP86-00513R001548730010-2

Name: SHCHEDROV, Viktor Sergeyevich

Dissertation: Investigation of processes of friction and wear-and-tear in the sliding contact of machines

Degree: Doc Med Sci

Affiliation: Moscow Automobile Mechanics Inst

Defense Date, Place: 6 Jul 55, Council of Moscow Order of Labor Red Banner Higher Tech School imeni Bauman

Certification Date: 30 Jun 56

Source: BMVO 5/57

APPROVED FOR RELEASE: 08/09/2001 CIA-RDP86-00513R001548730010-2"

"APPROVED FOR RELEASE: 08/09/2001 CIA-RDP86-00513R001548730010-2

SHCHEDROV, V.S

"On Preliminary Displacement,"

paper submitted for presentation at the Conference on Lubrication and Wear, London, 1-3 October 1957.

The Chartered Mechanical Engineer, Sep 57, p. 340-42

APPROVED FOR RELEASE: 08/09/2001 CIA-RDP86-00513R001548730010-2"

"APPROVED FOR RELEASE: 08/09/2001 CIA-RDP86-00513R001548730010-2

4-6-13/30

AUTHOR: Shchedrov V.S., Doctor of Technical Sciences, Professor, and Przhemistkiy, V.I.

TITLE: Demons of Time (Demony vremeni)

PERIODICAL: Znaniye - Sila, 1957, # 6, pp 20 - 26 (USSR)

ABSTRACT: The article deals with anti-gravity research in America. At the Institute of Perspective Research of Princeton University, new small particles causing gravitation, called gravitons, were discovered among the products of split nuclei. On the basis of this discovery it might be possible to design new engines by transferring gravitons or, as proposed by the Fund of Gravitation Research by applying a gravity absorber. Canadian scientists are also endeavouring to utilize such an absorber for aviation.

Finally the authors touch new trends in science - electro-gravity- and mention researches conducted in this field by Gerardin, a French physicist and Townsend T. Brown, an American scientist, who established connections between electricity magnetism and gravity through magnetic coils and condensers.

The authors conclude that the reviewed information may conceal enormous research in the field of electro-gravity.

Card 1/2

APPROVED FOR RELEASE: 08/09/2001 CIA-RDP86-00513R001548730010-2"

"APPROVED FOR RELEASE: 08/09/2001 CIA-RDP86-00513R001548730010-2

SHCHEDROV, V.S., doktor tekhn.nauk, otv.red.; BELYANIN, P.N., red.izd-va; POLYAKOVA, T.V., tekhn.red.

[Increasing the efficiency of braking devices. Properties of friction materials] Povyshenie effektivnosti tormoznykh ustroistv. Svoistva friktsionnykh materialov. Moskva, 1959. 183 p. (MIRA 12:12)

1. Akademiya nauk SSSR. Institut mashinovedeniya.
(Brakes) (Friction)

APPROVED FOR RELEASE: 08/09/2001 CIA-RDP86-00513R001548730010-2"

"APPROVED FOR RELEASE: 08/09/2001 CIA-RDP86-00513R001548730010-2

PHASE I BOOK EXPLOITATION SOV/3604

Akademiya nauk SSSR. Institut mashinovedeniya

Povysheniye effektivnosti tormoznykh ustroystv. Svoystva friktsionnykh materialov (Increasing the Efficiency of Braking Devices. Properties of Friction Materials) Moscow, Izd-vo AN SSSR, 1959. 183 p. Errata slip inserted. 1,800 copies printed.

Resp. Ed.: V.S. Shchedrov, Doctor of Technical Sciences, Professor; Ed. of Publishing House: P.N. Belyanin; Tech. Ed.: T.V. Polyakova.

PURPOSE: This collection of articles is intended for engineers and scientific workers specializing in brakes and friction materials.

COVERAGE: The first group of articles deals with basic design measures for increasing the life and efficiency of brakes, the second group with problems related to the development and fields of application of new friction materials, the third group with testing methods and the results of investigations of friction pairs and brakes, and the fourth group with the design of brakes and calculation data. No personalities are mentioned. References accompany most of the articles.

PART III. METHODS OF TESTING AND INVESTIGATING FRICTION PAIRS AND BRAKES

Levenstern, O. L. Methods of Inspection Testing of Brake Linings for Automobiles 121

This article deals with the development of a method and equipment for testing automobile brake linings under conditions close to those during actual operation.

Shchetinin, V.K. Testing Asbestos Friction Materials by the Modeling Method 130

The author describes the working principle of a newly developed testing stand for determining the coefficient of friction, wear, braking action, and the temperature regime of various types of asbestos friction material.

Chichinadze, A.V. Laboratory Full-Scale Tests of the New FK-161 "Retinaks" Friction Material on a Heavily Loaded Brake 145

The author gives experimental data on the above material developed at VNIIATI GSKh and IMASh of the Academy of Sciences of the USSR on full-scale drum and disk-type brakes.

PART IV. DESIGNING BRAKES 159

Aleksandrov, M.P. Modeling in Designing and Calculating Braking Devices 159

The author describes the application of modeling to designing brakes for freight-hoisting equipment, and the analytical work involved in it.

Marochkin, V.N., and A.V. Chichinadze. Calculating Resistance Forces in Disk Brakes 170

The authors present a method of exact calculation of the elements of resistance, the friction force and torque of a sector-type brake shoe. The method can be also applied to any other shape of the brake shoe.

Shchedrov, V.S., and A.V. Chichinadze. On the "Mutual Overlapping" Coefficient [ratio of friction surfaces of two bodies in sliding contact] 180

The authors discuss dependence of the coefficient of friction and the rate of wear on the temperature gradient in the layer close to the friction surface. They also discuss the dependence of the three above-mentioned parameters and of the friction surface temperature on the coefficient of mutual overlapping.

AVAILABLE: Library of Congress

VK/rem/jb
8-24-60

Card 7/7

APPROVED FOR RELEASE: 08/09/2001 CIA-RDP86-00513R001548730010-2"

"APPROVED FOR RELEASE: 08/09/2001 CIA-RDP86-00513R001548730010-2

APPROVED FOR RELEASE: 08/09/2001 CIA-RDP86-00513R001548730010-2"

"APPROVED FOR RELEASE: 08/09/2001 CIA-RDP86-00513R001548730010-2

APPROVED FOR RELEASE: 08/09/2001 CIA-RDP86-00513R001548730010-2"

"APPROVED FOR RELEASE: 08/09/2001 CIA-RDP86-00513R001548730010-2

SHAKHMALIYEV, Gasan Mursalovich, dots., kand. tekhn. nauk; SHCHEDROV, V.S., prof., doktor tekhn. nauk, red.; RASHEVSKAYA, T.A., red. izd-va

[Studying the performance of a mechanical brake on a drow-works and devising an efficient system of lowering a drill tool] Issledovanie raboty mekhanicheskogo tormoza burovoi lebedki i razrabotka ratsional'nogo rezhima spuska buril'nogo instrumenta. Red. V.S.Shchedrov. Baku, Azerbaidzhasnkoe gos. izd-vo neft. i nauchno-tekhn. lit-ry, 1960. 221 p. (MIRA 14:7)

(Oil well drilling) (Winches)

APPROVED FOR RELEASE: 08/09/2001 CIA-RDP86-00513R001548730010-2"

"APPROVED FOR RELEASE: 08/09/2001 CIA-RDP86-00513R001548730010-2

MAL'KOVSKIY, Georgiy Pavlovich; SHCHEDROV, V.S., prof., red.; KUSURGASHEV, I.M., red.; SEMENOV, Yu.P., tekhn.red.

[Mass and energy in modern physics] O masse i energii v sovremennoi fizike. Kazan', Izd-vo Kazanskogo univ., 1961. 178 p. (MIRA 15:2)

(Mass (Physics)) (Force and energy)

APPROVED FOR RELEASE: 08/09/2001 CIA-RDP86-00513R001548730010-2"

"APPROVED FOR RELEASE: 08/09/2001 CIA-RDP86-00513R001548730010-2

SHCHEDROV, Viktor Sergeyevich; ARBUZOV, V.N., kand. tekhn. nauk, retsenzent; YAMINSKIY, V.V., kand. tekhn. nauk, red.; NIKITIN, A.G., red. izd-va; EL'KIND, V.D., tekhn. red.

[Fundamentals of the mechanics of a flexible string] Osnovy mekhaniki gibkoi niti. Moskva, Gos. nauchno-tekhn. izd-vo mashinostroit. lit-ry, 1961. 170 p. (MIRA 14:6)
(Elastic rods and wires)

APPROVED FOR RELEASE: 08/09/2001 CIA-RDP86-00513R001548730010-2"

"APPROVED FOR RELEASE: 08/09/2001 CIA-RDP86-00513R001548730010-2

SHCHEDROV, V.S.; TROYANOVSKAYA, G.I.

General analysis of similitude conditions in case of static friction. Tren.i izn.mash. no.15:305-321 '62. (MIRA 15:4)
(Friction)

APPROVED FOR RELEASE: 08/09/2001 CIA-RDP86-00513R001548730010-2"

"APPROVED FOR RELEASE: 08/09/2001 CIA-RDP86-00513R001548730010-2

LINEGIN, S.V., doktor tekhn. nauk, prof.; KOROVCHINSKIY, M.V., kand. tekhn. nauk, retsenzent; SHCHEIPOV, V.S., doktor tekhn. nauk, prof., red.

[Contact strength in machinery] Kontaktnaia prochnost' v mashinakh. Moskva, Mashinostroenie, 1965. 190 p. (MIRA 18:4)

APPROVED FOR RELEASE: 08/09/2001 CIA-RDP86-00513R001548730010-2"

"APPROVED FOR RELEASE: 08/09/2001 CIA-RDP86-00513R001548730010-2

KRAGEL'SKIY, I.V., doktor tekhn. nauk, prof., otv. red.;
SHCHELKOV, V.S., doktor tekhn. nauk prof., otv. red.;
RESHETOV, D.N., doktor tekhn. nauk, prof., otv. red.;
CHICHINADZE, A.V., kand. tekhn. nauk, otv. red.;
KNOROZ, M.M., red.

[Theory of friction and wear] Teoriia treniia i iznosa. Moskva, Nauka, 1965. 364 p. (MIRA 18:7)

APPROVED FOR RELEASE: 08/09/2001 CIA-RDP86-00513R001548730010-2"

"APPROVED FOR RELEASE: 08/09/2001 CIA-RDP86-00513R001548730010-2

MIRLIN, G.A., kand. tekhn. nauk; SAVCHENKO, V.S., inzh.; SHCHEDROV, V.S., doktor tekhn. nauk

Formation of spatter in spot welding and methods to correct it. Svar. proizv. no.5:4-7 My '64. (MIRA 18:11)

1. Moskovskiy avtomekhanicheskiy institut (for Mirlin, Shchedrov).
2. Moskovskiy avtomobil'nyy zavod imeni Likhacheva (for Savchenko).

APPROVED FOR RELEASE: 08/09/2001 CIA-RDP86-00513R001548730010-2"

"APPROVED FOR RELEASE: 08/09/2001 CIA-RDP86-00513R001548730010-2

SHCHEDROVA, V.I.

Injuries to the young growth of spruce received during lumbering operations and wound rot. Trudy Kar.fil.AN SSSR no.16: 127-135 '59. (MIRA 13:4)
(Spruce--Diseases and pests)
(Trees--Wounds and injuries)

APPROVED FOR RELEASE: 08/09/2001 CIA-RDP86-00513R001548730010-2"

"APPROVED FOR RELEASE: 08/09/2001 CIA-RDP86-00513R001548730010-2

[illegible]

[illegible] cotch pine. Bot. zhur. 49 no.9:1314-1317 S '64. (MIRA 17:12)

1. Leningradskaya akademiya imeni S.M. Kirova, Leningrad.

APPROVED FOR RELEASE: 08/09/2001 CIA-RDP86-00513R001548730010-2"

"APPROVED FOR RELEASE: 08/09/2001 CIA-RDP86-00513R001548730010-2

SHCHEDROVICH, A. YA.

PA 38/49T52

USSR/Engineering
Engines, Diesel
Pistons

Dec 48

"Timing the Pause of the Connecting Rod With the Piston," A. Ya. Shchedrovich, Diesel Petroleum Installation, 4 pp.

"Energet Byul" No 12

By using method described, each connecting rod was timed with the piston in one operation, instead of six, in maintenance work on a Diesel motor.

38/49T52

APPROVED FOR RELEASE: 08/09/2001 CIA-RDP86-00513R001548730010-2"

"APPROVED FOR RELEASE: 08/09/2001 CIA-RDP86-00513R001548730010-2

SHCHEDROVICH, A.YA.

Diesel Motor

Performance of the engine SD 30/50 Energ. biul. No. 3, 1952.

52

SO: Monthly List of Russian Accessions, Library of Congress, June 1953, Uncl.

APPROVED FOR RELEASE: 08/09/2001 CIA-RDP86-00513R001548730010-2"

"APPROVED FOR RELEASE: 08/09/2001 CIA-RDP86-00513R001548730010-2

1. INOSEDROVICH, A. Ya.

2. USSR (600)

4. Dynamos

7. Solving the problem of torsion fluctuations in the shaft connections of diesel generators and engines 7TS-32, Energ. biul., No. 11, 1952.

9. Monthly List of Russian Accessions, Library of Congress, March, 1953. Unclassified.

APPROVED FOR RELEASE: 08/09/2001 CIA-RDP86-00513R001548730010-2"

"APPROVED FOR RELEASE: 08/09/2001 CIA-RDP86-00513R001548730010-2

AID P - 3874

Subject : USSR/Engineering

Card 1/1 Pub. 28 - 2/7

Author : Shchedrovich, A. Ya.

Title : The 6 C-350 and NT-45 Diesel and Pump Installation

Periodical : Energ. byul., 11, 11-18, N 1955

Abstract : In recent years, the oil pipeline pumping stations have been planning replacement of obsolete engines with modern power units. The author describes the 6C-350 Diesel (590 HP at 330 rpm, 6 cyl. 350 mm bore, 500 mm stroke and 13.2 compression ratio) with the NT-45 plunger-pump attached, (both of Czechoslovakian origin) and gives results of the tests of two such installations conducted by the Bashkirskaya Petroleum Administration in the spring of 1955. Four drawings and 3 graphs.

Institution : All-Union Trust for the Efficient Utilization of Power and Petroleum ("Orgenergoneft'")

Submitted : No date

APPROVED FOR RELEASE: 08/09/2001 CIA-RDP86-00513R001548730010-2"

"APPROVED FOR RELEASE: 08/09/2001 CIA-RDP86-00513R001548730010-2

SHCHEDROVICH, A.Ya.

Mirrlees HFS-8 motors. Energ.biul. no.2:17-25 F '56. (MLRA 9:5)
(Diesel engines) (Electric generators)

APPROVED FOR RELEASE: 08/09/2001 CIA-RDP86-00513R001548730010-2"

"APPROVED FOR RELEASE: 08/09/2001 CIA-RDP86-00513R001548730010-2

AUTHOR: Shchedrovich, A.Ya. SOV/90-58-2-3/9

TITLE: On Transforming the "Worthington" EEX-8 Diesel into a Gas-Liquid-Fuelled Engine (Perevod dizelya "Vortington" EEX-8 na gazo-zhidkostnyy tsikl)

PERIODICAL: Energeticheskiy byulleten', 1958, Nr 2, pp 9-17 (USSR)

ABSTRACT: The author describes the experiences of transforming 2 Worthington EEX-8 diesels into gas-liquid-fuelled engines. The year of make of the diesels was 1939; their rated capacity was 1,050 hp (700 kW). Reconstruction was done at the Soyuznaya kontora (Federal Bureau) Orgenergoneft' in 1956/57. The diesels were operating at the power plants of the Turkmenneft' Trust in Nebit-Dag. Experiments were aimed at comparing the performances of the 2 diesels before and after the reconstruction. The author then describes and illustrates the reconstruction itself, lists the results of the tests and concludes in favor of the conversion, particularly because of the economical advantages flowing from it. One reconstructed "Vortington" diesel saves 540 tons of liquid

Card 1/2

APPROVED FOR RELEASE: 08/09/2001 CIA-RDP86-00513R001548730010-2"

"APPROVED FOR RELEASE: 08/09/2001 CIA-RDP86-00513R001548730010-2

SOV/90-58-2-3/9

On Transforming the "Worthington" EEX-8 Diesel into a Gas-Liquid-Fuelled Engine

fuel yearly. If all Worthington diesels operating in the power plants of the Turkmenneft' were to be reconstructed, 4,300 tons of liquid fuel would be saved yearly.
There are 4 graphs, 3 diagrams, 1 table and 3 Soviet references.

1. Diesel engines--Design 2. Fuels--Performance 3. Gases --Combustion 4. Diesel engines--Test results

Card 2/2

APPROVED FOR RELEASE: 08/09/2001 CIA-RDP86-00513R001548730010-2"

"APPROVED FOR RELEASE: 08/09/2001 CIA-RDP86-00513R001548730010-2

RAVKIND, A.A., kand.tekhn.nauk; SHCHEDROVICH, A.Ya., inzh.

Conversion of a 500 hp. Skoda diesel to gas-diesel operation.
Prom. energ. 20 no.7:20-25 Jl '65.
(MIRA 18:12)

APPROVED FOR RELEASE: 08/09/2001 CIA-RDP86-00513R001548730010-2"

"APPROVED FOR RELEASE: 08/09/2001 CIA-RDP86-00513R001548730010-2

SHCHEDROVITSKIY, G.P.

Principles of the analysis of objective structure of thinking on the basis of the concepts of content-genetic logic. Vop. psikhol. 10 no.2:125-132 Mr-Ap '64. (MIRA 17:9)

1. Institut doshkol'nogo vospitaniya Akademii pedagogicheskikh nauk RSFSR, Moskva.

APPROVED FOR RELEASE: 08/09/2001 CIA-RDP86-00513R001548730010-2"

"APPROVED FOR RELEASE: 08/09/2001 CIA-RDP86-00513R001548730010-2

SHCHEDROVITSKIY, Georgiy Petrovich; SAVVAIEVEVA, G.L., red.

[Methodology problems in system analysis] Problemy metodologii sistemnogo issledovaniia. Moskva, Znanie, 1964. 46 p. (Novoe v zhizni, nauke, tekhnike. II Seriia: Filosofiia, no.4) (MIRA 17:12)

APPROVED FOR RELEASE: 08/09/2001 CIA-RDP86-00513R001548730010-2"

"APPROVED FOR RELEASE: 08/09/2001 CIA-RDP86-00513R001548730010-2

BIANKIN, [illegible] (deceased); [illegible], G.I., red.;
[illegible], A.[illegible], red.

[Selected psychological works] Izbrannye psikhologicheskie
proizvedeniia. Moskva, Prosveshchenie, 1964. 546 p.
(MIRA 18:3)

APPROVED FOR RELEASE: 08/09/2001 CIA-RDP86-00513R001548730010-2"

"APPROVED FOR RELEASE: 08/09/2001 CIA-RDP86-00513R001548730010-2

L 31329-65 EWG(j)/EWT(d)/FSS-2/EWG(r)/EEC(k)-2/EWG(a)/EWG(c) Po-4/Pq-4/Pg-4/Pk-4/
P1-4

ACCESSION NR: AP4046057 S/0245/64/000/005/0118/0121

AUTHOR: Gippenreyter, Yu. B.; Vergiles, N. Yu.; Shchedrovitskiy, L. P.

52
48
B

TITLE: New methods of recording eye tremors

SOURCE: Voprosy* psikhologii, no. 5, 1964, 118-121

TOPIC TAGS: ophthalmology, eye tremor, micromovement, recording technique, accelerometer

ABSTRACT: Two new methods, a "mirror" method and an electromechanical method, have been developed to record eye micromovements. In the "mirror" method the reflection of an illuminator ray by the mirror of a suction cup attached to the sclera of the eye is used to record micromovement. By using a slit illuminator, horizontal components of eye micromovements can be recorded on movie camera film. A system of flat mirrors arranged in an elliptical arc ensures recording of the horizontal components under any eye conditions. The illuminator ray reflected by the suction cup mirror is then reflected by one of the "ellipse" mirrors into the movie camera opening. Eye tremors

Card 1/3

APPROVED FOR RELEASE: 08/09/2001 CIA-RDP86-00513R001548730010-2"

"APPROVED FOR RELEASE: 08/09/2001 CIA-RDP86-00513R001548730010-2

L 31329-65
ACCESSION NR: AP4046057

4

recorded by the "mirror" method indicate the presence of high frequency components whose amplitude is so small that quantitative analysis is difficult. The problem of quantitative analysis is solved by the electromechanical method which records a second derivative of eye tremors. An accelerometer device is attached to the sclera of the eye with a special suction cup and signals are transmitted to an ac amplifier. A tentative analysis of eye tremor recordings shows that the new methods are highly sensitive. Eye tremor frequencies up to 200 cps have been clearly recorded whereas the literature gives 100 cps as the maximum frequency, and an amplitude of 5 angular seconds (corresponding to eye displacement of 0.4 micron) has been recorded which is 3 times smaller than the minimum tremor recorded in the literature. These methods and equipment were developed in the Engineering Psychology Laboratory of the Psychology Department of Moscow State University under the supervision of Prof. A. N. Leont'yev. Departmental engineers V. A. Oboyev and V. I. Cherny*shev participated in the work. Orig. art. has: 4 figures.

ASSOCIATION: Otdeleniya psikhologii Moskovskogo universiteta (Psychology Department, Moscow University)

Card 2/3

APPROVED FOR RELEASE: 08/09/2001 CIA-RDP86-00513R001548730010-2"

"APPROVED FOR RELEASE: 08/09/2001 CIA-RDP86-00513R001548730010-2

L 31329-65

ACCESSION NR: AP4046057

SUBMITTED: 00 ENCL: 00 SUB CODE: LS, PH

NR REF SOV: 003 OTHER: 007

Card 3/3

APPROVED FOR RELEASE: 08/09/2001 CIA-RDP86-00513R001548730010-2"

"APPROVED FOR RELEASE: 08/09/2001 CIA-RDP86-00513R001548730010-2

LAURINGSON, A.I.; SHCHEDROVITSKIY, L.P.

Some data on the tracking system of an eye. Biofizika 10 no.1: 137-140 '65. (MIRA 18:5)

1. Institut avtomatiki i telemekhaniki AN SSSR, Moskva.

APPROVED FOR RELEASE: 08/09/2001 CIA-RDP86-00513R001548730010-2"

"APPROVED FOR RELEASE: 08/09/2001 CIA-RDP86-00513R001548730010-2

L 38972-65

ACCESSION NR: AP5009290 S/0217/65/010/002/0369/0369

AUTHOR: Lauringson, A. I.; Shchedrovitskiy, L. P.

8
B

TITLE: The accuracy of eye movement following displaced fixation points

SOURCE: Biofizika, v. 10, no. 2, 1965, 369

TOPIC TAGS: photo optics, ocular dynamics, fixation point, optometry

ABSTRACT: The purpose of the experiment was to determine the accuracy of eye tracking movements. The subject's head was placed rigidly facing a screen on which were fixed and moving points of light. The angular displacement between fixed and moving points was 1, 2.5, 5, 7.5, and 10° in any direction. The distance between the screen and the subject's eyes was 1.6 m. A photo-optical method was used to register eye motion. Individual eye movements including fixation on initial and final points and tracking of a skipping point or points were photographed. By comparing the dynamics of eye movements in response to uniform stimuli it was possible to establish the accuracy of eye tracking motion. The data revealed that at all angular displacements regardless of the direction, the accuracy of eye tracking was on the order of 4.5—6'. Tracking motions were accomplished with 1, 2, and in some cases, 3 hops of the eye. The number of hops depended on the magnitude of

Card 1/2

APPROVED FOR RELEASE: 08/09/2001 CIA-RDP86-00513R001548730010-2"

"APPROVED FOR RELEASE: 08/09/2001 CIA-RDP86-00513R001548730010-2

L 38972-65

ACCESSION NR: AP5009290

0

displacement. At 1°, eye tracking movement across the screen took place in one hop. At angular values of 7.5 and 10°, however, 1 hop per tracking motion was observed in only 10% of the cases. It was found that the first hop in that tracking motion containing several hops was, in most cases, shorter (10 times) than the whole tracking motion. The error in the direction of the first hop of the eye was most often 1—5°, sometimes reaching 15°. The direction along a horizontal plane was more accurate. In many cases, hopping took place along a distorted trajectory. Of interest was the fact that jumps between identical original and terminal points could have different trajectories. The accuracy established in the experiment (4.5—6') corresponds well with the magnitude of zones of insensitivity determined by Glezer in 1959. Orig. art. has: 1 figure. [CD]

ASSOCIATION: Institut avtomatiki i telemekhaniki AN SSSR, Moscow (Institute of Automation and Telemechanics, AN SSSR)

SUBMITTED: 02Jun64 ENCL: 00 SUB CODE: LS,OP

NO REF SOV: 001 OTHER: 000 ATD PRESS: 3228

Card 2/2

APPROVED FOR RELEASE: 08/09/2001 CIA-RDP86-00513R001548730010-2"

"APPROVED FOR RELEASE: 08/09/2001 CIA-RDP86-00513R001548730010-2

FEDOROV, B.A.,; SHCHEDROVITSKIY, S.S.

Effect of the number of readings of weight scales on the weighing results. Izm. tekh. no.2:32-37 Mr-Ap '55
(MLRA 8:9)

1. Sverdlovskiy filial Vsesoyuznogo nauchno-issledovatel'skogo instituta metrologii (for Fedorov). 2. MGIMIP (for Shchedrovitskiy)
(Scales (Weighing instruments))

APPROVED FOR RELEASE: 08/09/2001 CIA-RDP86-00513R001548730010-2"

"APPROVED FOR RELEASE: 08/09/2001 CIA-RDP86-00513R001548730010-2

SHCHEDROVITSKIY,S.S.

"Repair of weighing instruments". S.O.Gauzner. Reviewed by S.S. Shchedrovitskii. Izm.tekh.no.4:63-64 Jl-Ag '55. (MLRA 8:10)
(Scales (Weighing instruments)) (Gauzner,S.O.)

APPROVED FOR RELEASE: 08/09/2001 CIA-RDP86-00513R001548730010-2"